ST2044

Current limited Power distribution switches

Features

- 80mΩ high-side MOSFET switch
- 500mA continuos current per channel
- independent thermal and short-circuit protection with overcurrent logic output
- Operating range from 2.7V to 5.5V
- CMOS- and TTL-compatible enable inputs
- 10ms OC_N fault blanking
- 2.5ms typical rise time
- Under voltage lock out
- 20µA maximum standby supply current
- Ambient temperature range, -40°C to 85°C
- ESD protection

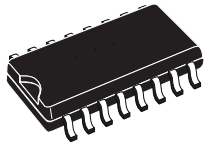

SO-16

Description

The ST2044 power distribution switches is intended for application where heavy capacitive loads and short circuits are likely to be encountered. These devices incorporate 80mΩ N-channel MOSFET high-side power switches for power-distribution systems that require multiple powers switches in a single package. Each switch is controlled by an independent logic enable input. Gate drive is provided by an internal charge pump designed to control the power-switch rise times and fall times to minimize current surges during switching. The charge pump requires no external components and allows operation from supplies as low as 2.7 V.

When the output load exceeds the current-limit threshold or a short is present, these devices limit the output current to a safe level by switching into a constant-current mode, pulling the overcurrent ($\overline{OCx}$) logic output low. A 10ms deglitching circuit provides fault blanking feature, preventing the OC_N pin to be asserted during hot-insertion or short spikes of overcurrent conditions.

When continuous heavy overloads and short circuits increase the power dissipation in the switch, causing the junction temperature to rise, a thermal protection circuit shuts off the switch to prevent damage. Recovery from a thermal shutdown is automatic once the device has cooled sufficiently. Internal circuitry ensures the switch remains off until valid input voltage is present. These power-distribution switches are designed to current limit at 0.9 A.

Obsolete Product(s) - Obsolete Product(s)

Table 1. Device summary

Part number	Package	Packaging
ST2044BD	SO-16	Tube (50 parts per tube, 40 tube per box)
ST2044BDR	SO-16	Tape and reel (2500 parts per reel)

Contents

1 Block diagram 3

2 Pin connections 4

3 Electrical ratings 5

3.1 Absolute maximum ratings 5

3.2 Recommended operating conditions 5

4 Electrical characteristics 6

5 Package mechanical data 9

6 Revision history 12

Obsolete Product(s) - Obsolete Product(s)

1 Block diagram

Figure 1. Block diagram

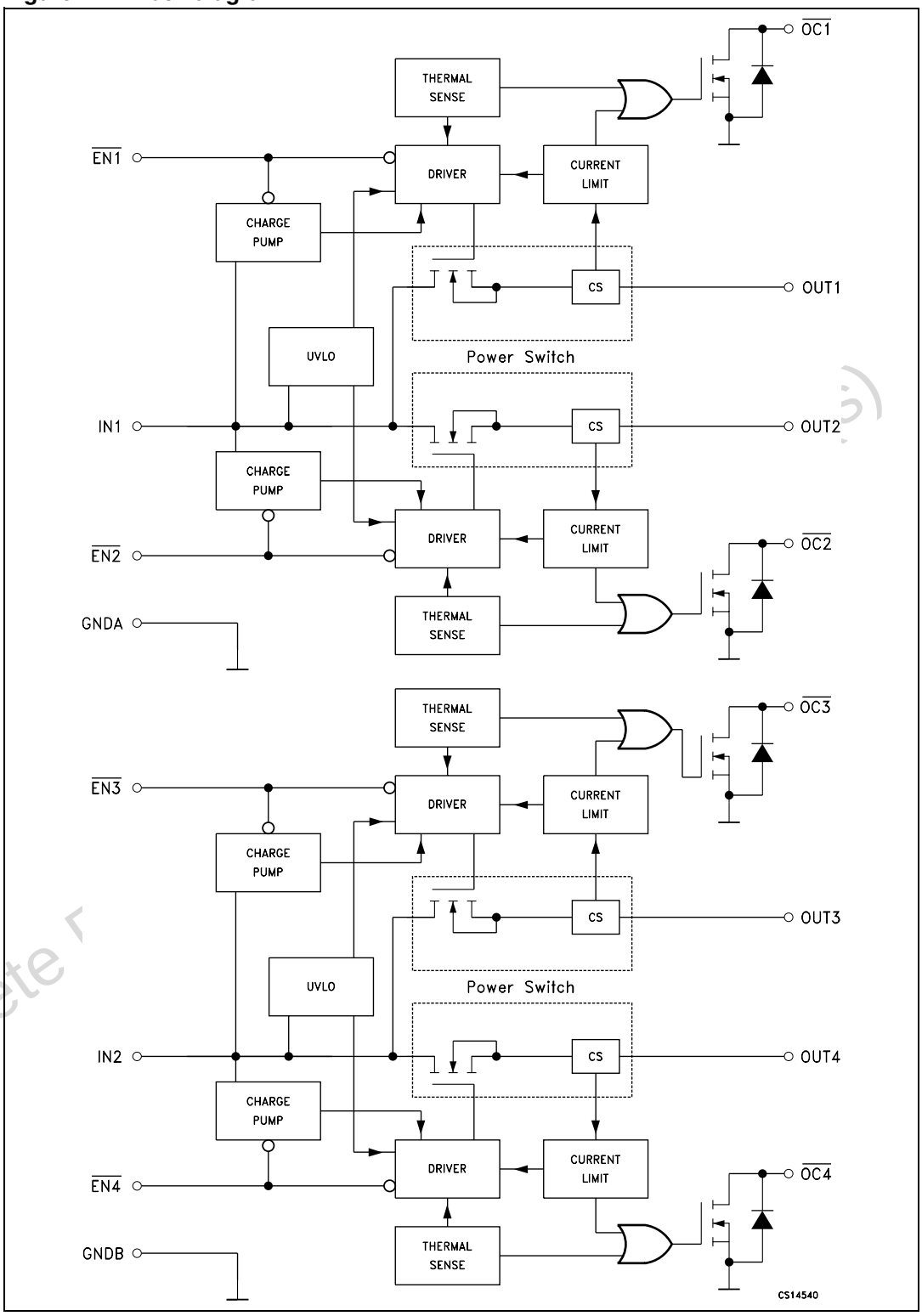

Obsolete Product(s)

2 Pin connections

Figure 2. Pin connections (top view)

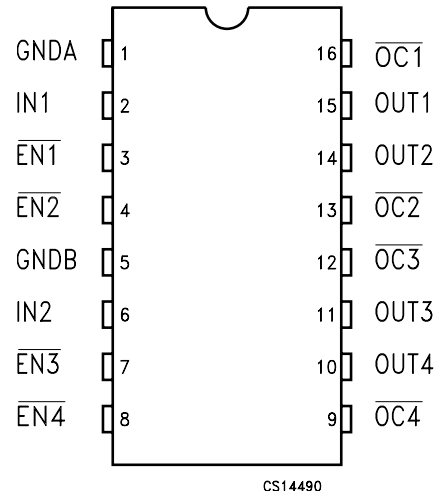

Table 2. Pin functions

Pin N°	Symbol	Description
1	GNDA	Ground
2	IN1	Input voltage
3	EN1	Enable input. logic low turns on power switch IN-OUT1
4	EN2	Enable input. logic low turns on power switch IN-OUT2
5	GNDB	Ground
6	IN2	Input voltage
7	EN3	Enable input. logic low turns on power switch IN-OUT3
8	EN4	Enable input. logic low turns on power switch IN-OUT4
9	OC4	Overcurrent. logic output active low IN-OUT4
10	OUT4	Power switch output
11	OUT3	Power switch output
12	OC3	Overcurrent. logic output active low IN-OUT3
13	OC2	Overcurrent. logic output active low IN-OUT2
14	OUT2	Power switch output
15	OUT1	Power switch output
16	OC1	Overcurrent. logic output active low IN-OUT1

Obsolete Product(s) - Obsolete Product(s)

3 Electrical ratings

3.1 Absolute maximum ratings

Stressing the device above the rating listed in the “Absolute Maximum Ratings” table may cause permanent damage to the device. These are stress ratings only and operation of the device at these or any other conditions above those indicated in the Operating sections of this specification is not implied. Exposure to Absolute Maximum Rating conditions for extended periods may affect device reliability. Refer also to the STMicroelectronics SURE Program and other relevant quality documents.

Table 3. Absolute maximum ratings

Symbol	Parameter	Value	Unit
V_I	Input voltage range (1)	-0.3 - 6	V
V_O	Output voltage range (1)	-0.3 - (V_I + 0.3)	V
V_{IENX}	EN Input voltage range	-0.3 to 6	V
I_O	Continuous output current	Internally Limited	
ESD	Electrostatic discharge	2	kV
T_J	Junction Operating Temperature	-40 to 125	C

1. All voltage are referred to GND

3.2 Recommended operating conditions

Table 4. Recommended operating conditions

Symbol	Parameter	Min	Typ	Max	Unit
V_I	Input voltage range (1)	2.7		5.5	V
V_O	Output voltage range (1)	0		5.5	V
I_O	Continuous output current (Per switch)	0		500	mA

1. All voltage are referred to GND

Obsolete Product(s) - Obsolete Product(s)

4 Electrical characteristics

V_I = 5.5V, I_O = rated current, $V_{\overline{IEN}}$ = 0V, T_J = 25°C, unless otherwise specified. (See *Note 1*)

Table 5. Power switch electrical characteristics

Symbol	Parameter	Test conditions		Min	Typ	Max	Unit
$R_{DS(on)}$	Static drain-source ON-state resistance	V_I = 5V	I_O = 0.5A		80	100	mΩ
		V_I = 5V	I_O = 0.5A, T_J = 85°C		90	120	
		V_I = 5V	I_O = 0.5A, T_J =125°C		100	135	
		V_I = 3.3V	I_O = 0.5A		90	125	
		V_I = 3.3V	I_O = 0.5A, T_J = 85°C		110	145	
		V_I = 3.3V	I_O = 0.5A, T_J = 125°C		120	160	
t_r	Output rise time	V_I = 5.5V	R_L = 10, C_L = 1µF		2.5		ms
		V_I = 2.7V			3		
t_f	Output fall time	V_I = 5.5V			0.3		ms
		V_I = 2.7V			0.2		

Table 6. Enable Input $\overline{ENx}$ characteristics

Symbol	Parameter	Test conditions	Min	Typ	Max	Unit
V_{IH}	High level input voltage	V_I = 2.7V to 5.5V	2			V
V_{IL}	Low level input voltage	V_I = 4.5V to 5.5V			0.8	V
		V_I = 2.7V to 4.5V			0.4	
I_I	Input current	V_{IENX} = 0V or V_I	-0.5		0.5	µA
t_{on}	Turn-on time	R_L= 10Ω C_L=100µF			20	ms
t_{off}	Turn-off time	R_L= 10Ω C_L=100µF			40	ms

Table 7. Current limit characteristics

Symbol	Parameter	Test conditions	Min	Typ	Max	Unit
I_{OS}	Short circuit output current	V_I = 5V, OUT connected to GND, device enabled into short circuit	0.7	1	1.3	A

Obsolete Product(s) Obsolete Product(s)

Table 8. Supply current characteristics

Symbol	Parameter	Test conditions	Min.	Typ.	Max.	Unit
I_{SOL}	Current low level output	$V_{IENX} = V_I$, No Load,		0.05	2	µA
		$V_{IENX} = V_I$, No Load, T_J=-40 to 125°C			20	
I_{SOH}	Current low high output	V_{IENX} = 0, No Load,		140	180	µA
		V_{IENX} = 0, No Load, T_J=-40 to 125°C			200	
I_L	Output leakage current	$V_{IENX} = V_I$, Output connected to GND, T_J=-40 to 125°C			20	µA

Table 9. Undervoltage characteristics

Symbol	Parameter	Test conditions	Min.	Typ.	Max.	Unit
V_{IL}	Low level input voltage		2		2.5	V
V_{HYS}	Hysteresis			100		mV

Table 10. Overcurrent (OC) characteristics

Symbol	Parameter	Test conditions	Min.	Typ.	Max.	Unit
I_{SINK}	Sink current	V_O = 5V	10			mA
V_O	Output low voltage	I_O = 5mA			0.5	V
I_{OFF}	OFF-state current	V_O = 5V V_O = 3.3V			1	µA
T_{FB}	Fault-blanking period	V_I = 5.5V, T_J = 25°C (See Note 2 and 3)	2	10		ms

Note: 1 Pulse testing techniques maintain junction temperature close to ambient temperature: thermal effect must be takes into account separately.

2 Specified by design, not production tested.

3 Guaranteed by design.

Obsolete Product(s) - Obsolete Product(s)

Figure 3. Test circuit

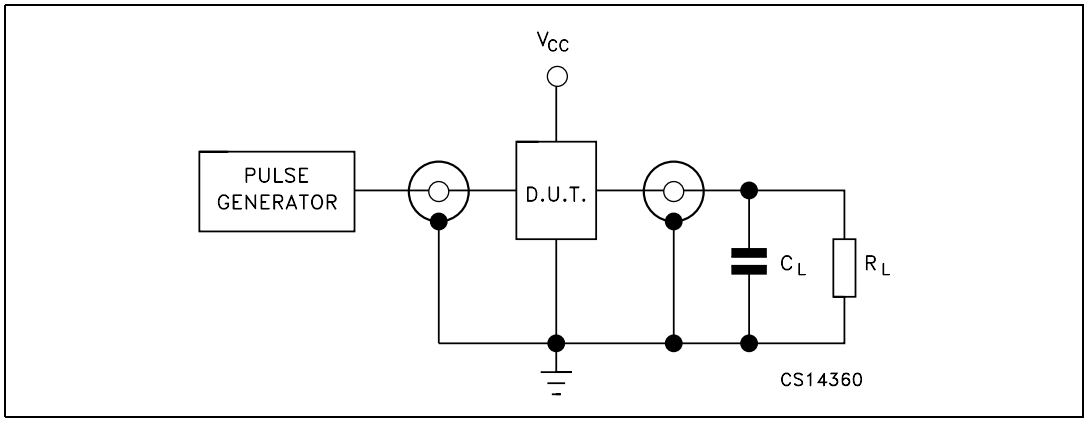

Figure 4. Waveform - propagation delays (f=1MHz; 50% duty cycle)

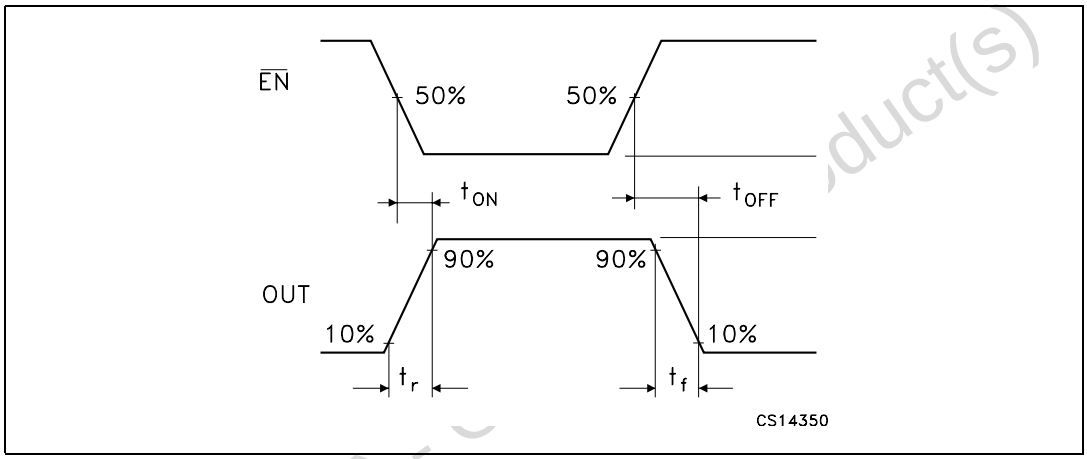

Obsolete Product(s)

5 Package mechanical data

In order to meet environmental requirements, ST offers these devices in ECOPACK® packages. These packages have a Lead-free second level interconnect. The category of second level interconnect is marked on the package and on the inner box label, in compliance with JEDEC Standard JESD97. The maximum ratings related to soldering conditions are also marked on the inner box label. ECOPACK is an ST trademark. ECOPACK specifications are available at: www.st.com

Obsolete Product(s) - Obsolete Product(s)

SO-16 MECHANICAL DATA

DIM.	mm.			inch		
	MIN.	TYP	MAX.	MIN.	TYP.	MAX.
A			1.75			0.068
a1	0.1		0.25	0.004		0.010
a2			1.64			0.063
b	0.35		0.46	0.013		0.018
b1	0.19		0.25	0.007		0.010
C		0.5			0.019	
c1	45° (typ.)					
D	9.8		10	0.385		0.393
E	5.8		6.2	0.228		0.244
e		1.27			0.050	
e3		8.89			0.350	
F	3.8		4.0	0.149		0.157
G	4.6		5.3	0.181		0.208
L	0.5		1.27	0.019		0.050
M			0.62			0.024
S	8° (max.)					

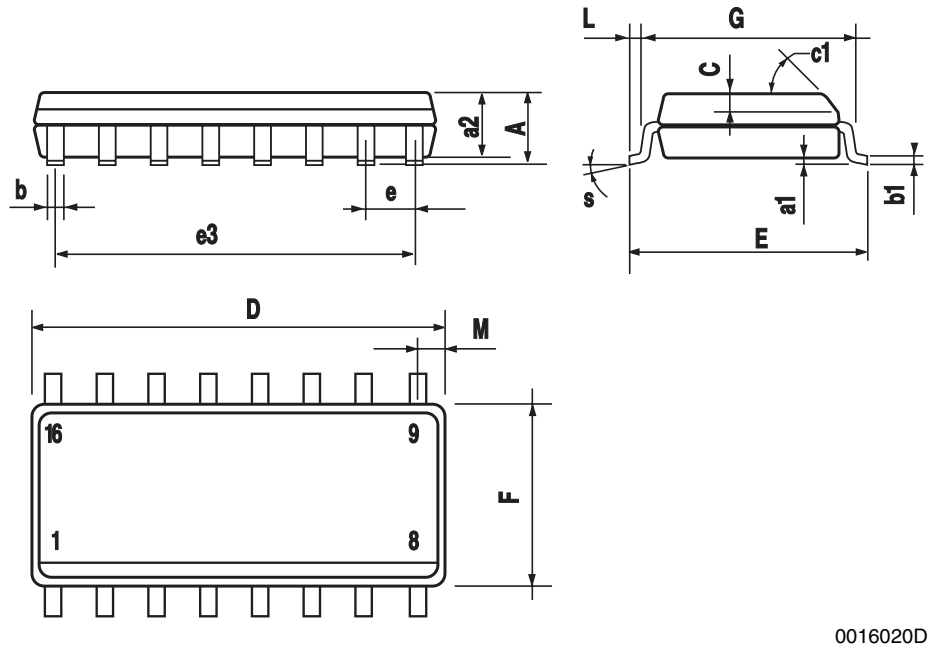

Obsole

Tape & Reel SO-16 MECHANICAL DATA

DIM.	mm.			inch		
	MIN.	TYP	MAX.	MIN.	TYP.	MAX.
A			330			12.992
C	12.8		13.2	0.504		0.519
D	20.2			0.795		
N	60			2.362		
T			22.4			0.882
Ao	6.45		6.65	0.254		0.262
Bo	10.3		10.5	0.406		0.414
Ko	2.1		2.3	0.082		0.090
Po	3.9		4.1	0.153		0.161
P	7.9		8.1	0.311		0.319

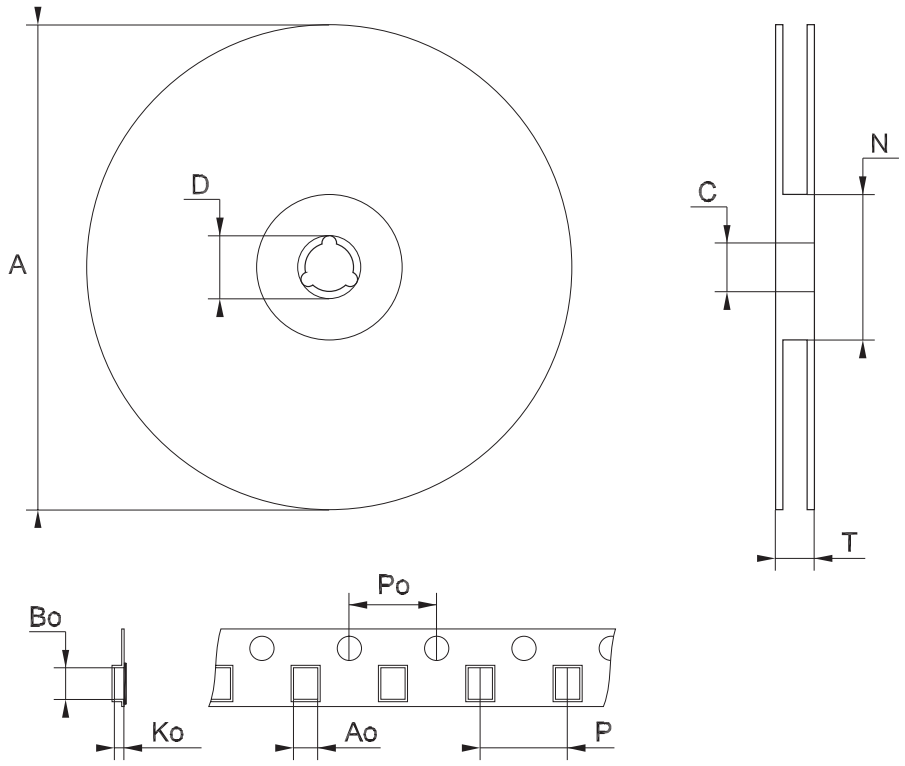

Note: Drawing not in scale

Obsole

6 Revision history

1
Table 11. Revision history

Date	Revision	Changes
13-Jul-2005	4	Add bullet on pag. 1, add paragraph in the description on pag. 1 and add row T_{FB} on Table 10.
29-May-2007	5	Updated features in cover page, document reformatted

Obsolete Product(s) - Obsolete Product(s)

Please Read Carefully:

Information in this document is provided solely in connection with ST products. STMicroelectronics NV and its subsidiaries (“ST”) reserve the right to make changes, corrections, modifications or improvements, to this document, and the products and services described herein at any time, without notice.

All ST products are sold pursuant to ST’s terms and conditions of sale.

Purchasers are solely responsible for the choice, selection and use of the ST products and services described herein, and ST assumes no liability whatsoever relating to the choice, selection or use of the ST products and services described herein.

No license, express or implied, by estoppel or otherwise, to any intellectual property rights is granted under this document. If any part of this document refers to any third party products or services it shall not be deemed a license grant by ST for the use of such third party products or services, or any intellectual property contained therein or considered as a warranty covering the use in any manner whatsoever of such third party products or services or any intellectual property contained therein.

UNLESS OTHERWISE SET FORTH IN ST’S TERMS AND CONDITIONS OF SALE ST DISCLAIMS ANY EXPRESS OR IMPLIED WARRANTY WITH RESPECT TO THE USE AND/OR SALE OF ST PRODUCTS INCLUDING WITHOUT LIMITATION IMPLIED WARRANTIES OF MERCHANTABILITY, FITNESS FOR A PARTICULAR PURPOSE (AND THEIR EQUIVALENTS UNDER THE LAWS OF ANY JURISDICTION), OR INFRINGEMENT OF ANY PATENT, COPYRIGHT OR OTHER INTELLECTUAL PROPERTY RIGHT.

UNLESS EXPRESSLY APPROVED IN WRITING BY AN AUTHORIZED ST REPRESENTATIVE, ST PRODUCTS ARE NOT RECOMMENDED, AUTHORIZED OR WARRANTED FOR USE IN MILITARY, AIR CRAFT, SPACE, LIFE SAVING, OR LIFE SUSTAINING APPLICATIONS, NOR IN PRODUCTS OR SYSTEMS WHERE FAILURE OR MALFUNCTION MAY RESULT IN PERSONAL INJURY, DEATH, OR SEVERE PROPERTY OR ENVIRONMENTAL DAMAGE. ST PRODUCTS WHICH ARE NOT SPECIFIED AS "AUTOMOTIVE GRADE" MAY ONLY BE USED IN AUTOMOTIVE APPLICATIONS AT USER’S OWN RISK.

Resale of ST products with provisions different from the statements and/or technical features set forth in this document shall immediately void any warranty granted by ST for the ST product or service described herein and shall not create or extend in any manner whatsoever, any liability of ST.

ST and the ST logo are trademarks or registered trademarks of ST in various countries.

Information in this document supersedes and replaces all information previously supplied.

The ST logo is a registered trademark of STMicroelectronics. All other names are the property of their respective owners.

© 2007 STMicroelectronics - All rights reserved

STMicroelectronics group of companies

Australia - Belgium - Brazil - Canada - China - Czech Republic - Finland - France - Germany - Hong Kong - India - Israel - Italy - Japan - Malaysia - Malta - Morocco - Singapore - Spain - Sweden - Switzerland - United Kingdom - United States of America

www.st.com